VUES NUES BOITE DANA N° 11.2HR18328-13

Vue n° 1

CLARK CLARK

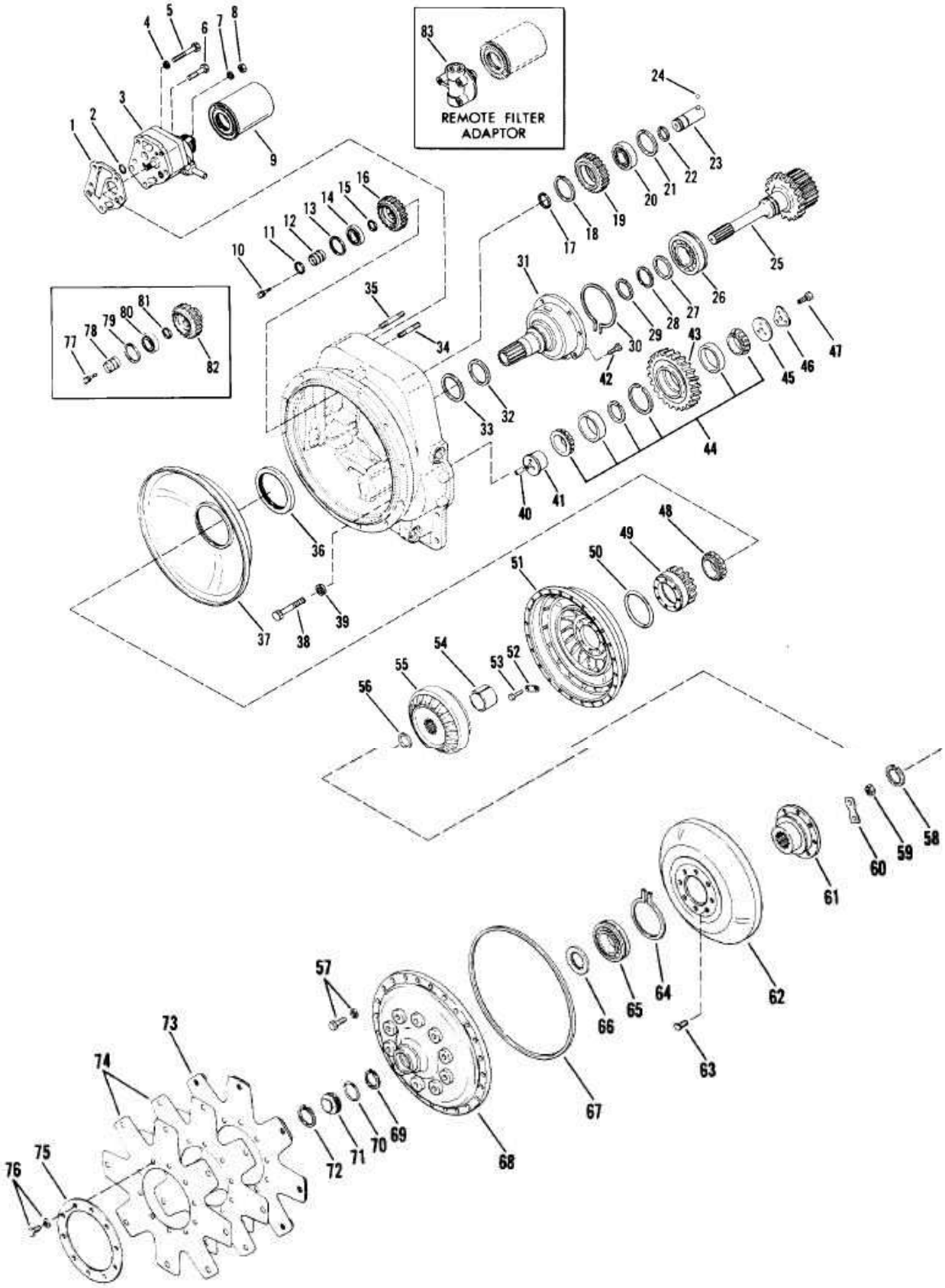

CLARK CLARK

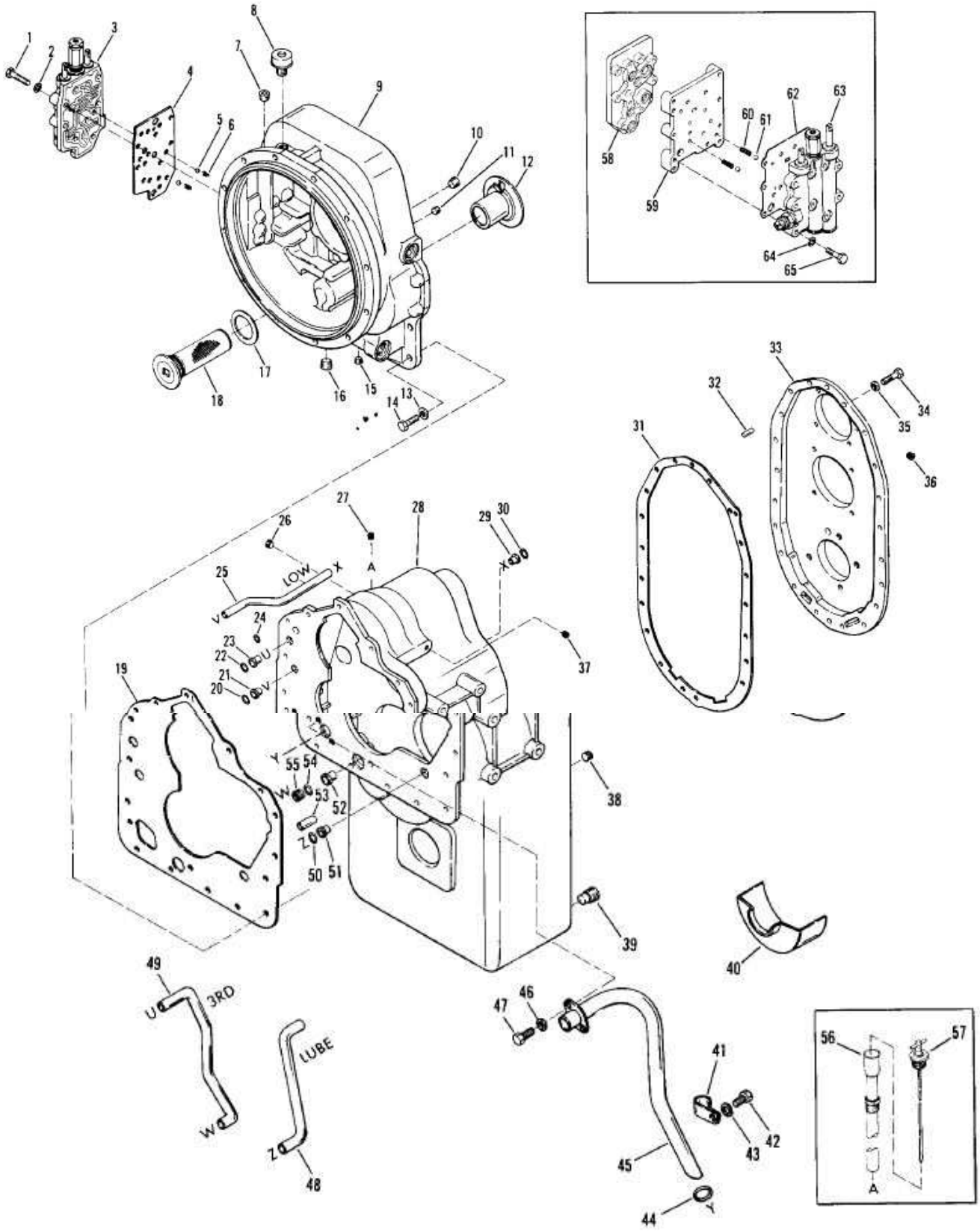

CLARK CLARK

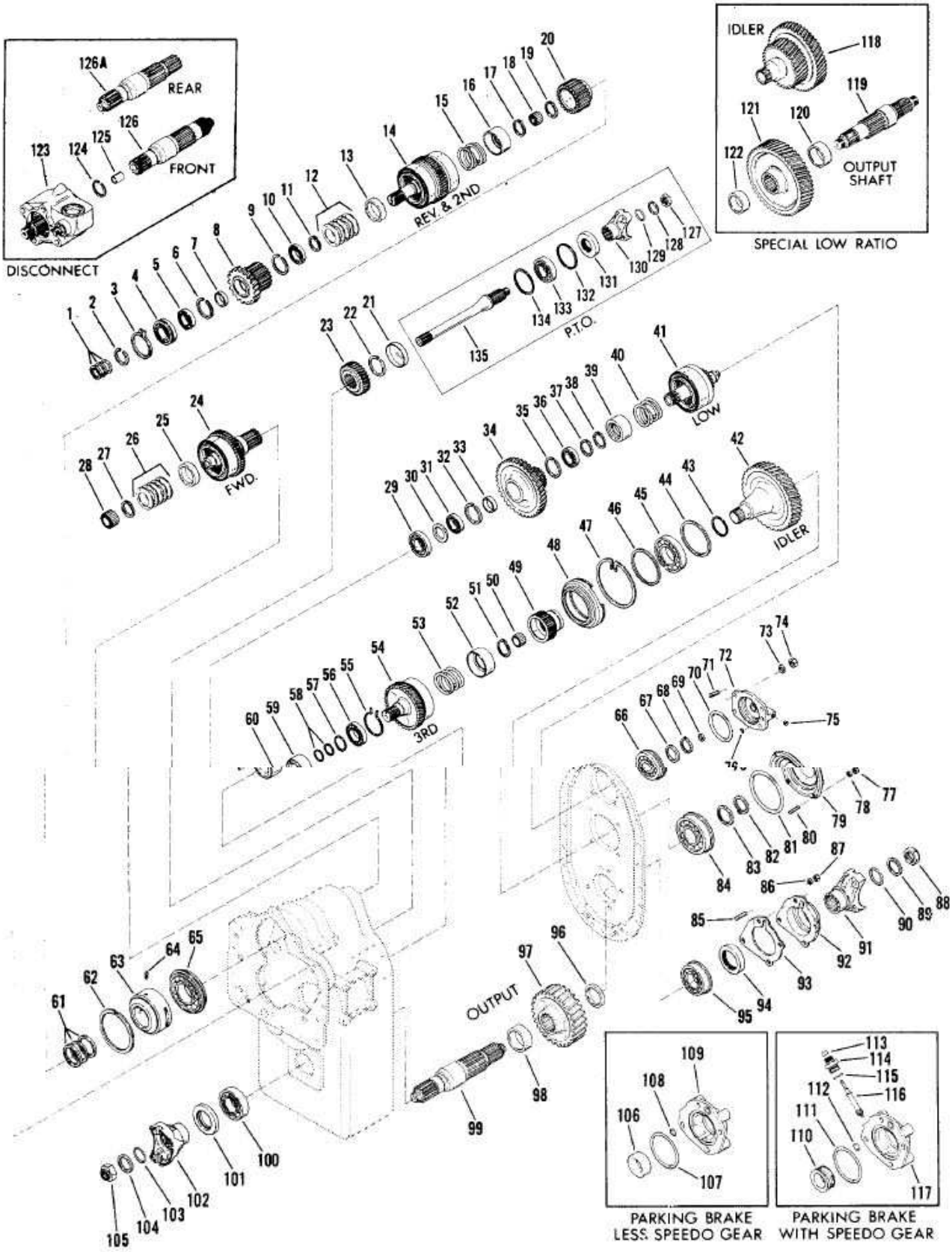
DISCONNECT
REAR
FRONT
REV. & 2ND
P.T.O.
FWD.
LOW
IDLER
3RD
OUTPUT
IDLER
OUTPUT SHAFT
SPECIAL LOW RATIO
PARKING BRAKE LESS SPEEDO GEAR
PARKING BRAKE WITH SPEEDO GEAR

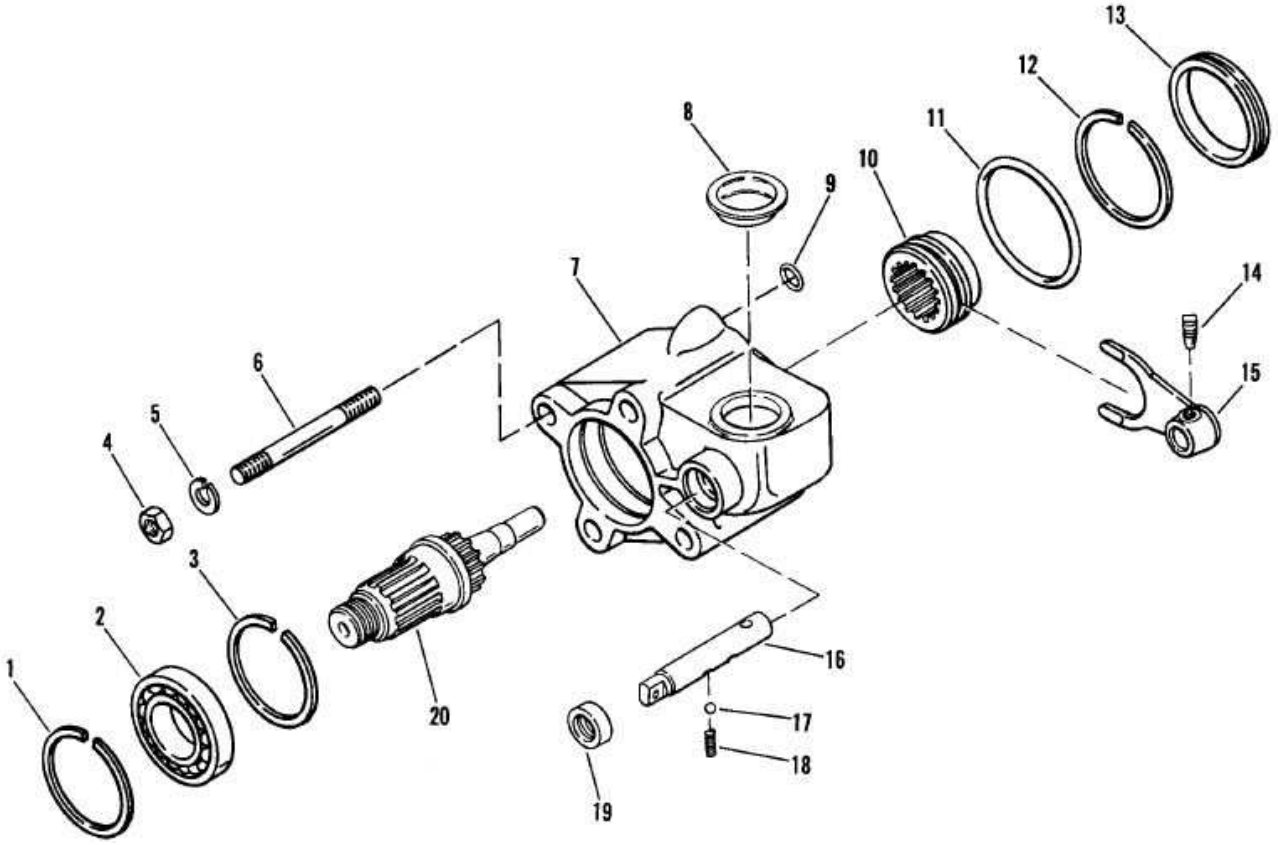

Vue n° 5

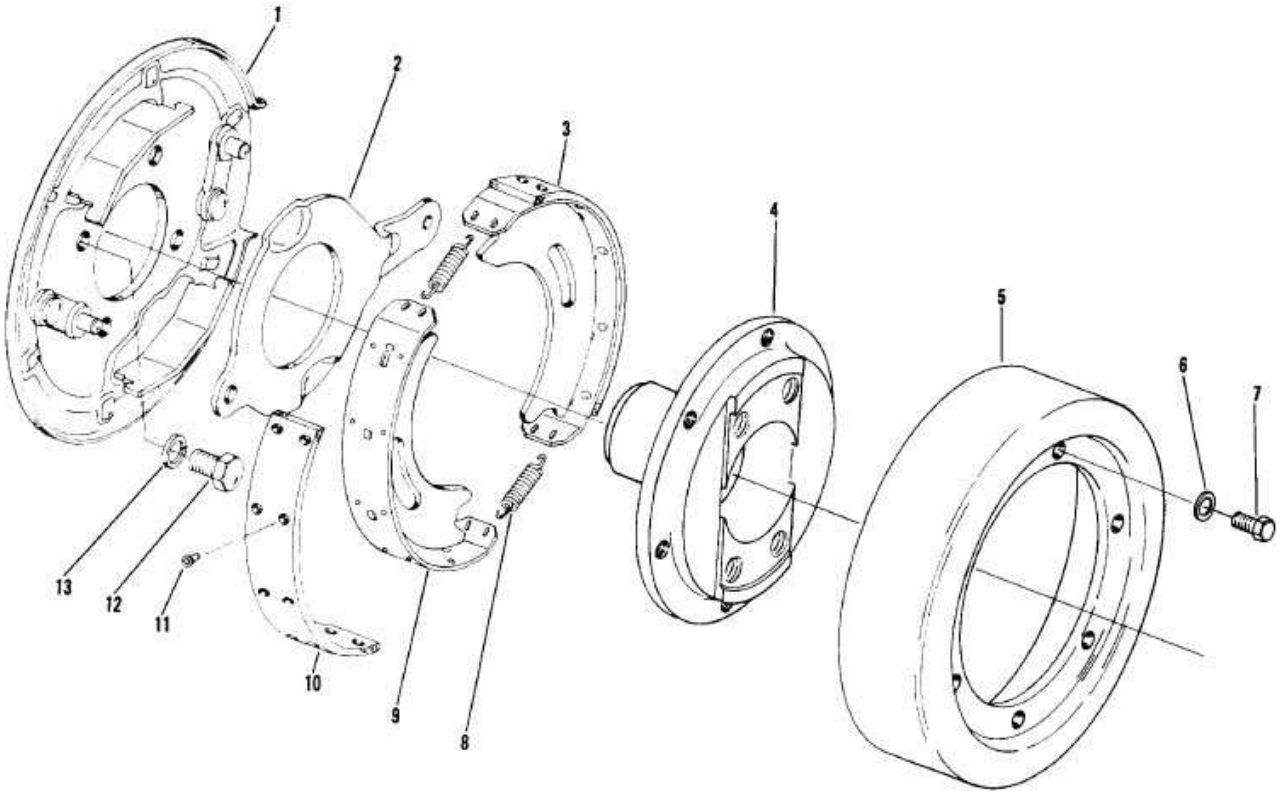

CLARK CLARK

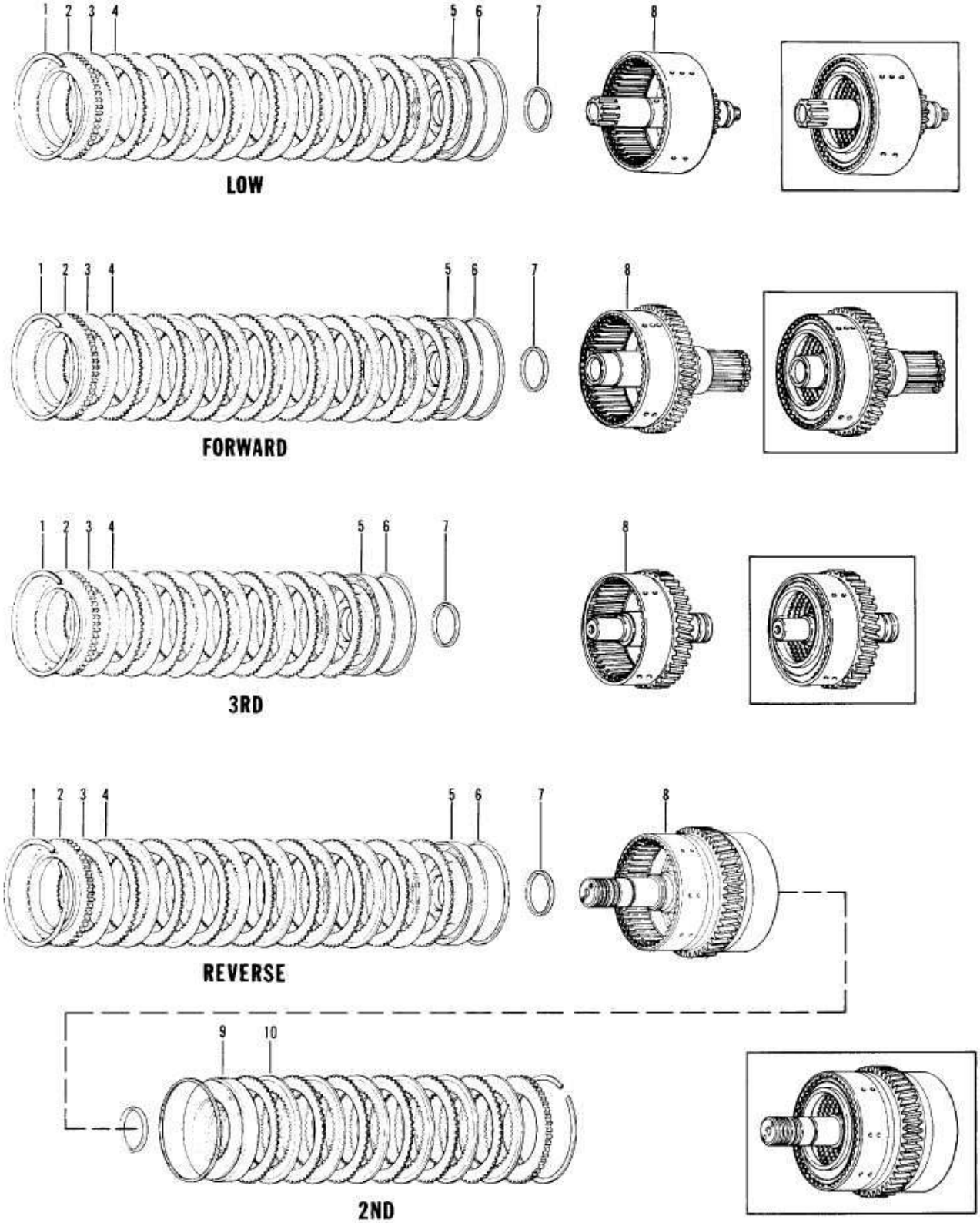

18000 SERIES 3 SPEED LONG DROP CLUTCH ASSEMBLY

CLARK CLARK

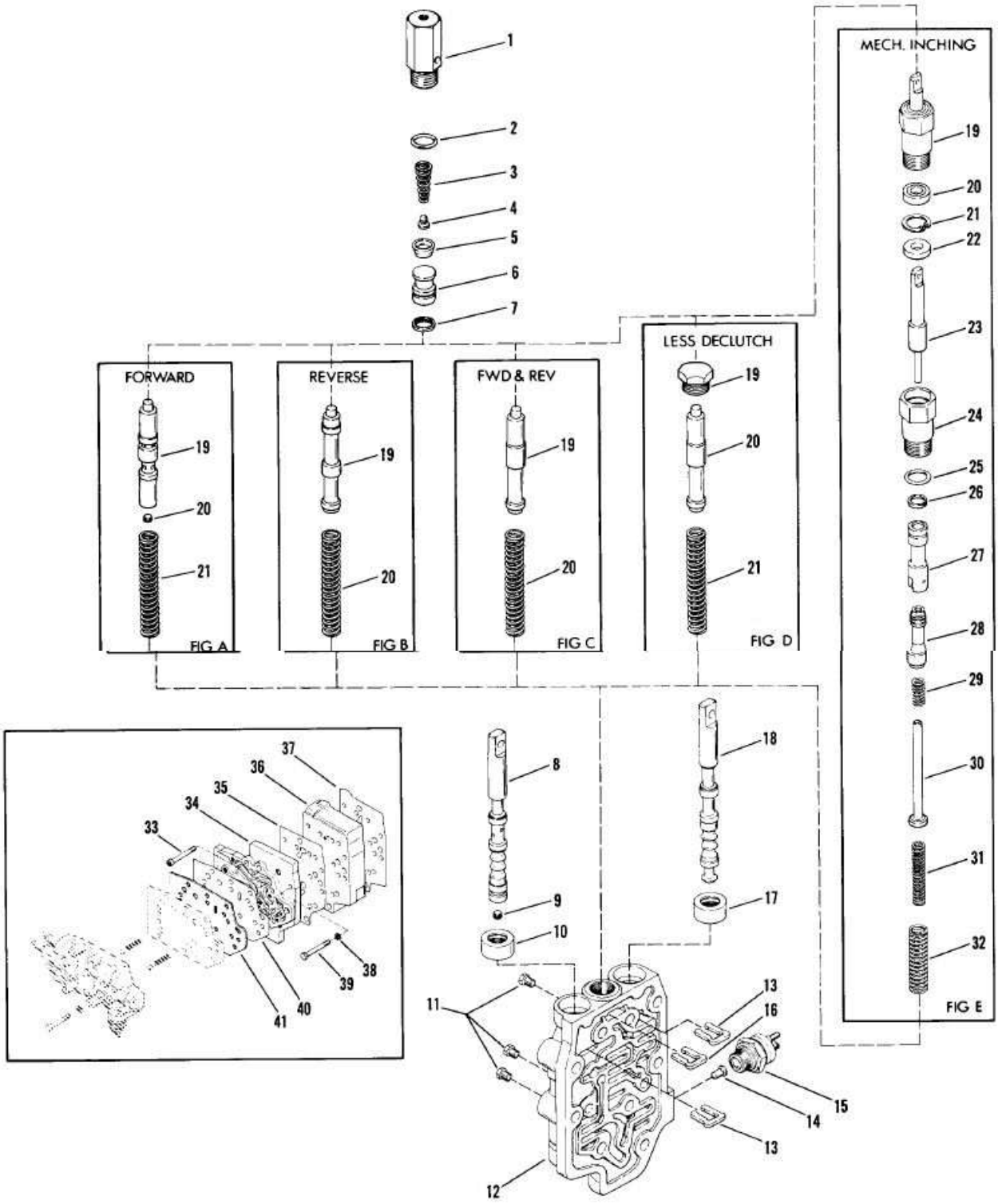

HYDRAULIC DECLUTCH

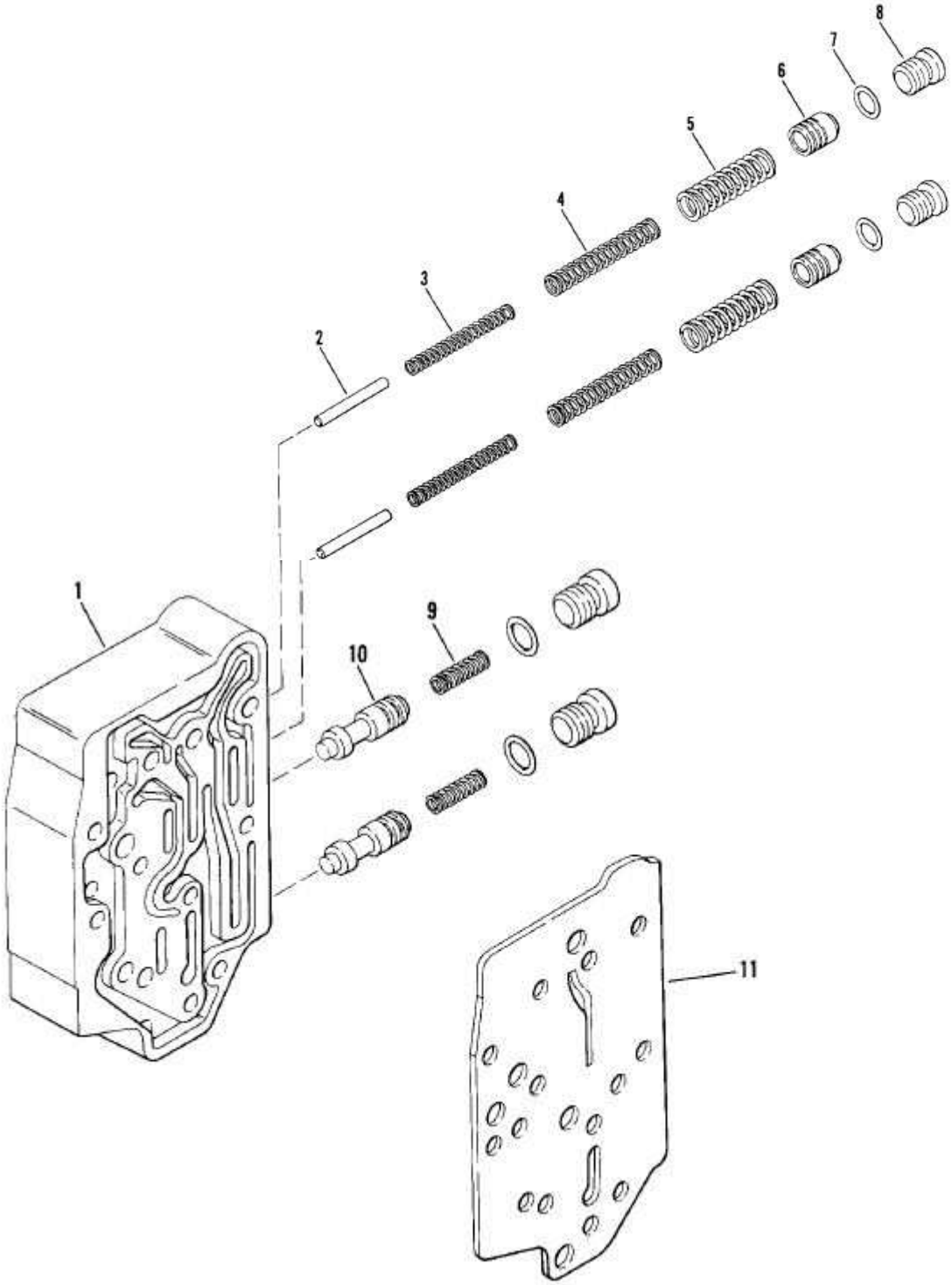
1
2
3
4
5
6
7
8
9
10
11